VWP-H-30816-000
SHT 1.1

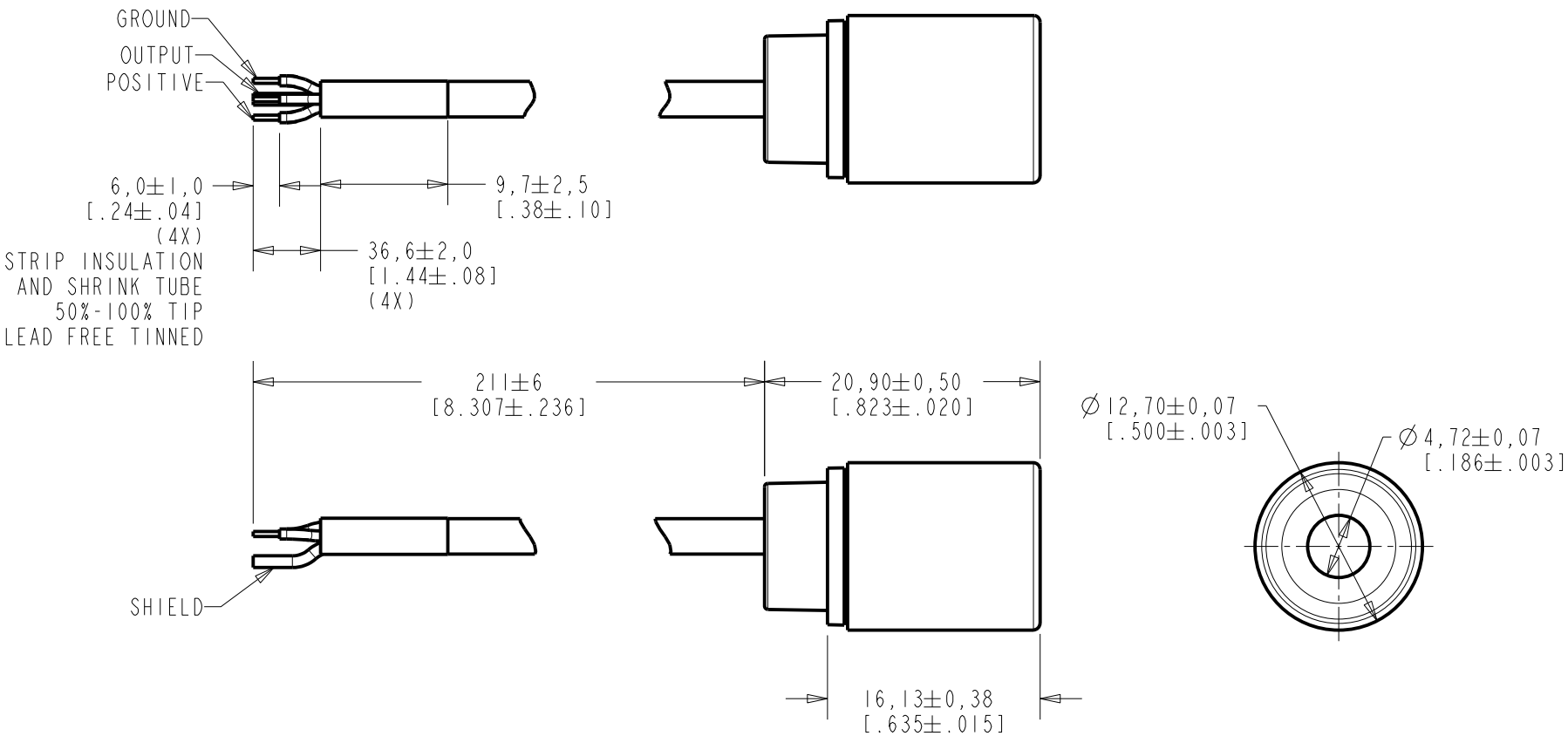

WIRE COLOR				WEIGHT GRAMS
+ve	OUTPUT	-ve	SHIELD	
RED	WHITE	BLACK	HEATSHRINK	4.6

DIMENSIONS IN MILLIMETERS [INCHES]

Revision	C.O. #	Implementation Date	RELEASE LEVEL	REVISION
			Active	A
A	C10100734	5-31-10		

KNOWLES ELECTRONICS
ITASCA, ILLINOIS U.S.A.

SCALE: 2:1

DO NOT SCALE DRAWING

TITLE: MICROPHONE
OUTLINE DRAWING

VWP-H-30816-000
SHT 1.1

DR. BY	DATE
LSY	5-31-10
CK. BY	DATE
GJP	6-2-10
APP. BY	DATE
GJP	6-2-10

KEIIASIZE.FRM Rev: B

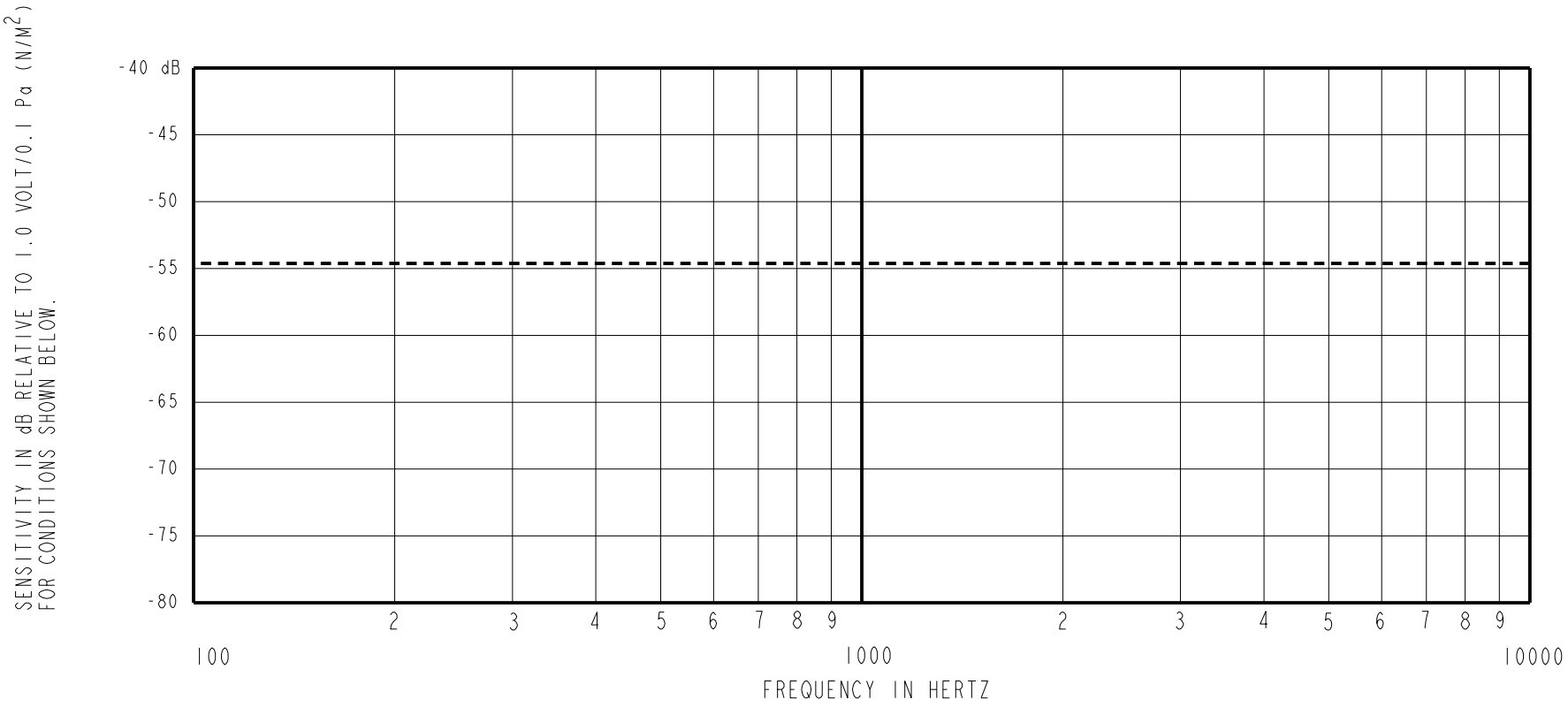

SENSITIVITY

FREQUENCY	MIN.	NOM.	MAX.
100	---	-55.0	---
1000	-58.0	-55.0	-52.0
10000	---	-55.0	---

DEVICE CONFORMITY

RANGE OF DEVIATION FROM 1KHz	
-4.0	+4.0
0.0	0.0
-4.0	+4.0

NOTES:

1. MICROPHONE TO BE FUNCTIONAL WITH 10 VDC SUPPLY.

2. TYPICAL SENSITIVITY TO HUMIDITY AT 1000 Hz IS 0.02 dB/%RH.

3. SENSITIVITY AND NOISE VALUES INDICATED ON THIS SPECIFICATION ARE VALID AT 50% HUMIDITY.

4. TEST CONDITIONS:
   SEAL PRODUCT TO 74 dBSPL SWEPT
   SOUND IELD CREATED BY VOICE APERTURE.
   B & K 4227 MOUTH SIMULATOR.

5. FOR MICROPHONE CAPSULE SPEC.SEE WP-23502-000.

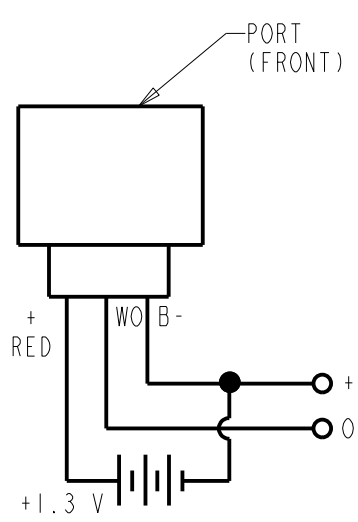

Revision	C.O. #	Implementation Date	RELEASE LEVEL	REVISION
			Active	A
A	C10100734	5-31-10		

KNOWLES ELECTRONICS
ITASCA, ILLINOIS U.S.A.

WHEN TEST LIMITS ARE USED TO ESTABLISH INCOMING INSPECTION ACCEPTANCE/REJECTION CRITERIA, CORRELATION OF TEST EQUIPMENT WITH KNOWLES IS ALSO REQUIRED FOR ELIMINATION OF EQUIPMENT AND TEST METHOD VARIATION

TITLE: MICROPHONE
PERFORMANCE SPECIFICATION

VWP-H-30816-000
SHT 2.1

DR. BY	DATE
LSY	5-31-10
CK. BY	DATE
GJP	6-2-10
APP. BY	DATE
GJP	6-2-10